Jasper Electric Motors, Inc.

175 Curry Hwy. Jasper, Al. 35502
800-382-5643 Fax 205-384-6073

Customer: _____ Date: _____
Address: _____ P.O.#: _____
City/State/Zip: _____ Tel. #: _____
Contact Name: _____ Fax #: _____

Mfg: _____ Voltage: _____
Hp: _____ Enclosure: _____
R.P.M._____ Design: _____
Frame: _____ Application: _____
No of Bars: _____ Bar Material _____ Ring Material: _____
Bar Conductivity: _____ Ring Conductivity: _____
Motor Application:_____

Slots are skewed Yes No

Runout on all finished surfaces: OK Excessive

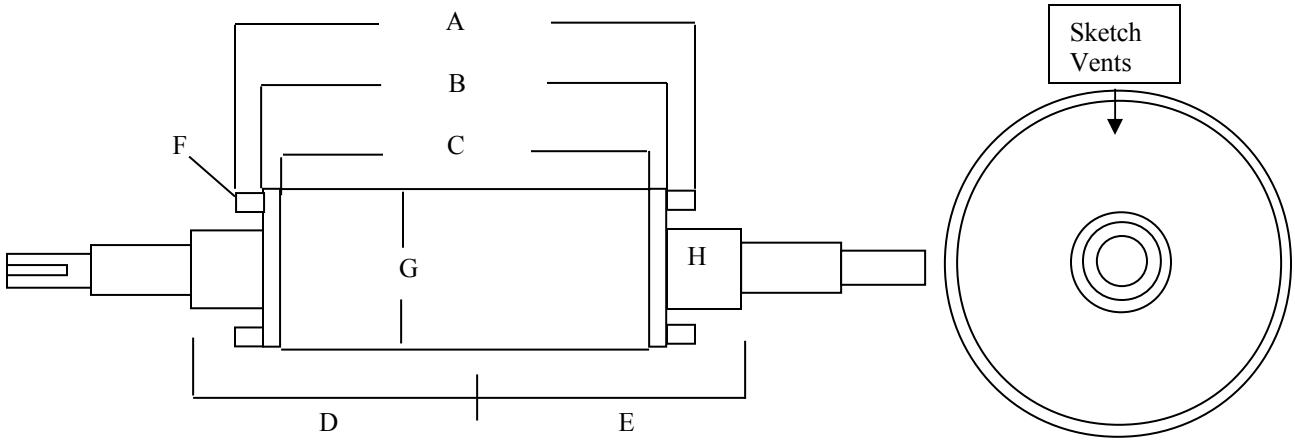

Dimensions (inches)	
A	
B	
C	
D	
E	
F	
G	
H	
I	
J	

Vent Location Detail

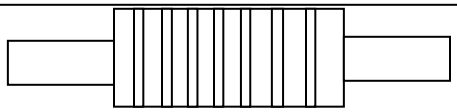

 # OF VENTS
VENT WIDTH

Fan Blade Detail

Rotor Bar Detail

Notes:

Jasper Electric Motors, Inc.

175 Curry Hwy. Jasper, Al. 35502
800-382-5643 Fax 205-384-6073